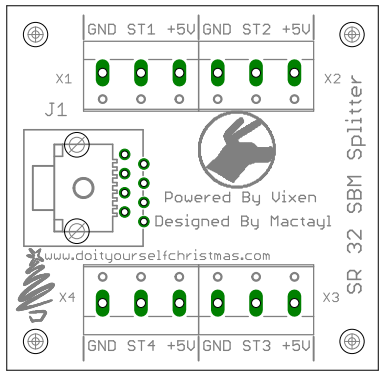
GND ST1 +5V
GND ST2 +5V
X1
X2
J1
SR 32 SBM Splitter
Powered By Vixen
Designed By Mactayl
www.doityourselfchristmas.com
X4
X3
GND ST4 +5V
GND ST3 +5V