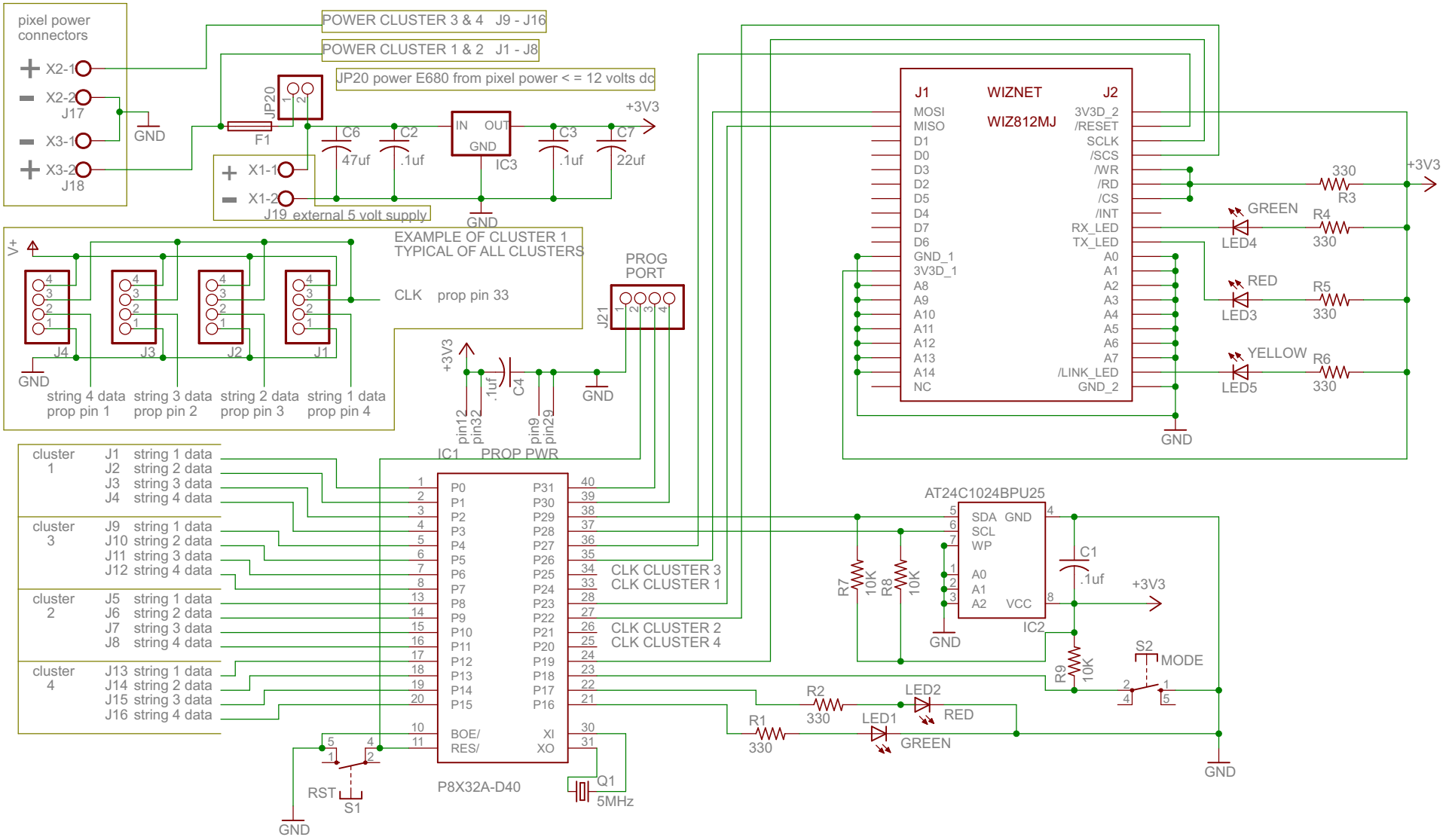
pixel power connectors
X2-1
X2-2
J17
X3-1
X3-2
J18
GND
POWER CLUSTER 3 & 4 J9 - J16
POWER CLUSTER 1 & 2 J1 - J8
JP20 power E680 from pixel power < = 12 volts dc
JP20
F1
C6
47uf
C2
.1uf
IN
OUT
GND
IC3
C3
.1uf
C7
22uf
+3V3
X1-1
X1-2
J19 external 5 volt supply
EXAMPLE OF CLUSTER 1
TYPICAL OF ALL CLUSTERS
CLK prop pin 33
V+
J4
J3
J2
J1
string 4 data prop pin 1
string 3 data prop pin 2
string 2 data prop pin 3
string 1 data prop pin 4
PROG PORT
J21
C4
.1uf
pin12
pin32
pin9
pin29
IC1 PROP PWR
cluster 1 J1 string 1 data
J2 string 2 data
J3 string 3 data
J4 string 4 data
cluster 3 J9 string 1 data
J10 string 2 data
J11 string 3 data
J12 string 4 data
cluster 2 J5 string 1 data
J6 string 2 data
J7 string 3 data
J8 string 4 data
cluster 4 J13 string 1 data
J14 string 2 data
J15 string 3 data
J16 string 4 data
P0
P1
P2
P3
P4
P5
P6
P7
P8
P9
P10
P11
P12
P13
P14
P15
BOE/
RES/
P31
P30
P29
P28
P27
P26
P25
P24
P23
P22
P21
P20
P19
P18
P17
P16
XI
XO
P8X32A-D40
CLK CLUSTER 3
CLK CLUSTER 1
CLK CLUSTER 2
CLK CLUSTER 4
RST
S1
Q1
5MHz
J1
WIZNET
WIZ812MJ
J2
MOSI
MISO
D1
D0
D3
D2
D5
D4
D7
D6
GND_1
3V3D_1
A8
A9
A10
A11
A12
A13
A14
NC
3V3D_2
/RESET
SCLK
/SCS
/WR
/RD
/CS
/INT
RX_LED
TX_LED
A0
A1
A2
A3
A4
A5
A6
A7
/LINK_LED
GND_2
330
R3
GREEN
LED4
R4
330
RED
LED3
R5
330
YELLOW
LED5
R6
330
AT24C1024BPU25
SDA
SCL
WP
A0
A1
A2
GND
VCC
IC2
C1
.1uf
R7
10K
R8
10K
R9
10K
S2
MODE
R1
330
R2
330
LED1
GREEN
LED2
RED