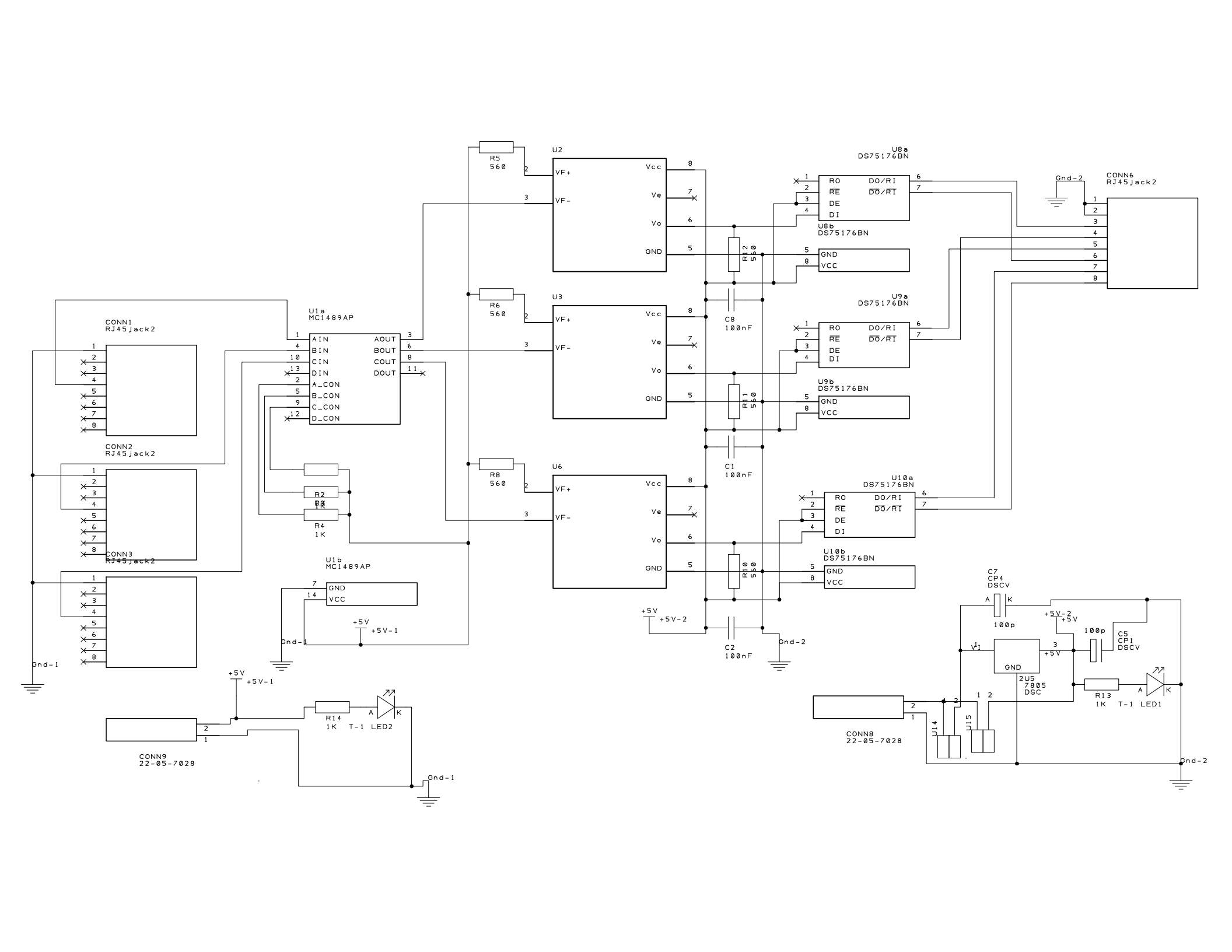
CONN1
RJ45jack2
CONN2
RJ45jack2
CONN3
RJ45jack2
U1a
MC1489AP
AIN
BIN
CIN
DIN
A_CON
B_CON
C_CON
D_CON
AOUT
BOUT
COUT
DOUT
R2
1K
R4
1K
U1b
MC1489AP
GND
VCC
+5V
+5V-1
Gnd-1
R5
560
R6
560
R8
560
U2
U3
U6
VF+
VF-
Vcc
Ve
Vo
GND
R12
560
R11
560
R10
560
C8
100nF
C1
100nF
C2
100nF
+5V
+5V-2
Gnd-2
U8a
DS75176BN
U8b
DS75176BN
U9a
DS75176BN
U9b
DS75176BN
U10a
DS75176BN
U10b
DS75176BN
RO
RE
DE
DI
DO/RI
DO/RI
GND
VCC
CONN6
RJ45jack2
Gnd-2
C7
CP4
DSCV
100p
C5
CP1
DSCV
100p
+5V-2
+5V
VI
GND
2U5
7805
DSC
R13
1K
T-1
LED1
U14
U15
CONN8
22-05-7028
CONN9
22-05-7028
R14
1K
T-1
LED2
Gnd-1
Gnd-2