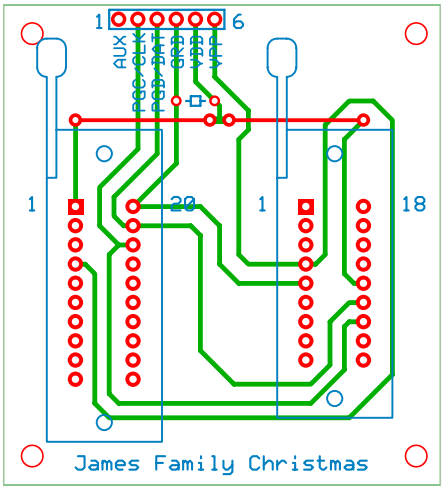
1
6
AUX
PGC/CLK
PGD/DAT
GND
VDD
VPP
1
20
1
18
James Family Christmas