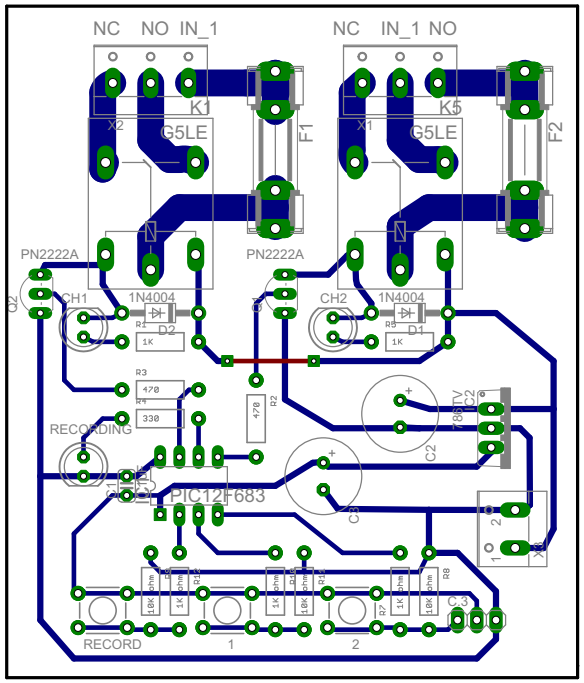
NC
NO
IN_1
NC
IN_1
NO
K1
G5LE
X2
F1
K5
G5LE
X1
F2
PN2222A
PN2222A
Q2
CH1
1N4004
D2
R1
1K
CH2
1N4004
D1
R5
1K
R3
470
R4
330
R2
470
RECORDING
C2
C2
PIC12F683
C3
X3
R8
R7
C3
RECORD
1
2