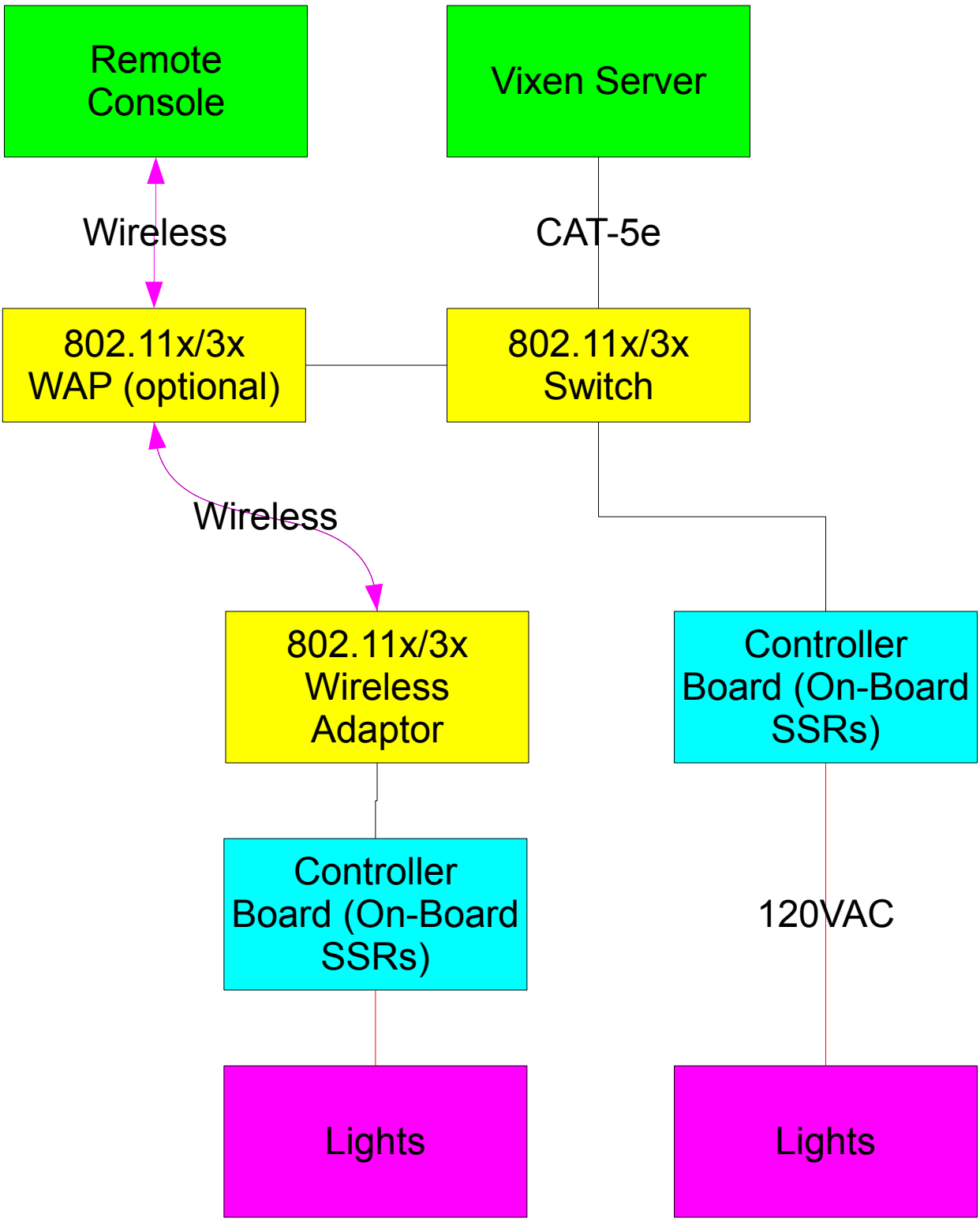
Remote Console
Vixen Server
Wireless
CAT-5e
802.11x/3x WAP (optional)
802.11x/3x Switch
Wireless
802.11x/3x Wireless Adaptor
Controller Board (On-Board SSRs)
Controller Board (On-Board SSRs)
120VAC
Lights
Lights