WizNet (W5100)

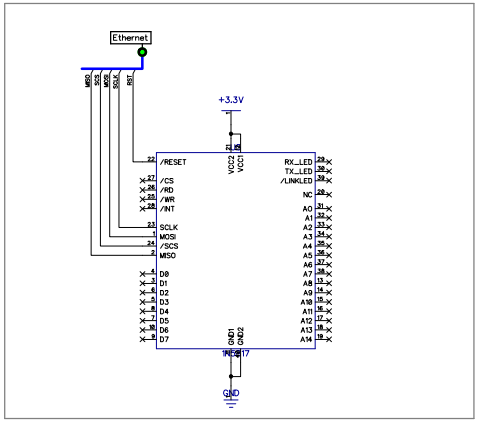

Creative Commons Attribution-Share Alike 3.0	**Propeller Dimmer**			
	Ethernet			
Benjamin Yaroch	SIZE B	FSCM NO.	DWG NO. 3 of 5	REV 1.0 d
January 10, 2010	SCALE		PropDimmer.dch	