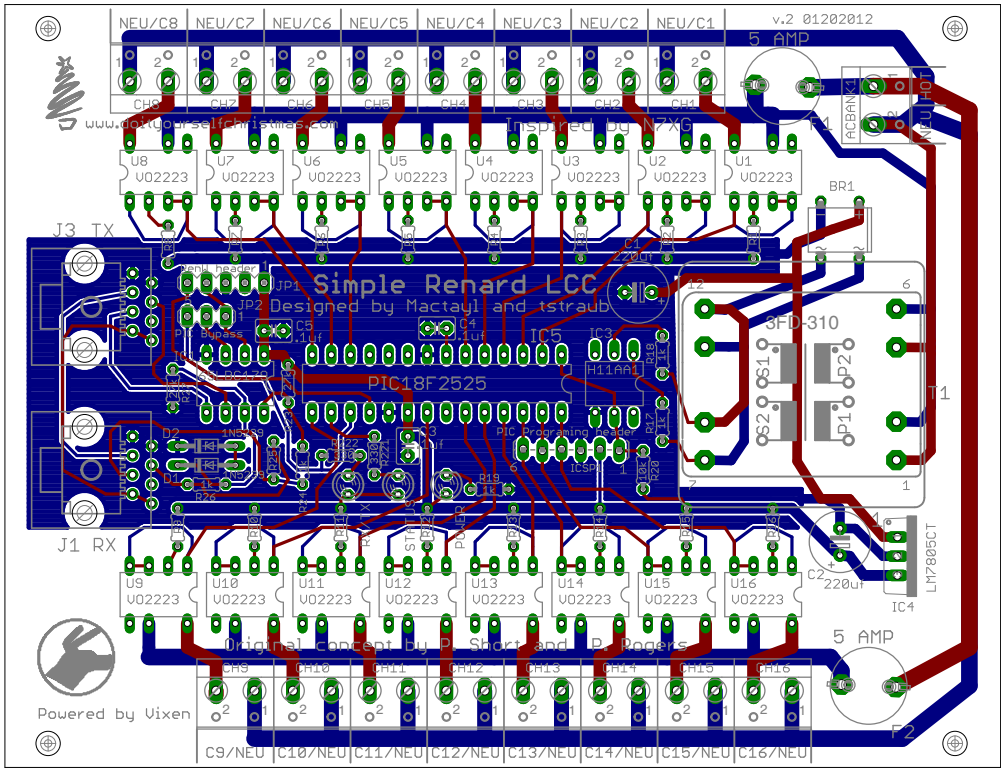

NEU/C8
NEU/C7
NEU/C6
NEU/C5
NEU/C4
NEU/C3
NEU/C2
NEU/C1
v.2 01202012
5 AMP
CH8
CH7
CH6
CH5
CH4
CH3
CH2
CH1
www.dollyourselfchristmas.com
Inspired by N7XG
U8
U7
U6
U5
U4
U3
U2
U1
VO2223
BR1
J3 TX
Simple Renard LCC
Designed by Mactayl and tstraub
JP1
JP2
PIC18F2525
IC5
IC3
H11AA1
3FD-310
T1
J1 RX
U9
U10
U11
U12
U13
U14
U15
U16
C2
220uf
LM7805CT
IC4
Original concept by P. Short and P. Rogers
5 AMP
CH9
CH10
CH11
CH12
CH13
CH14
CH15
CH16
Powered by Vixen
F2
C9/NEU
C10/NEU
C11/NEU
C12/NEU
C13/NEU
C14/NEU
C15/NEU
C16/NEU