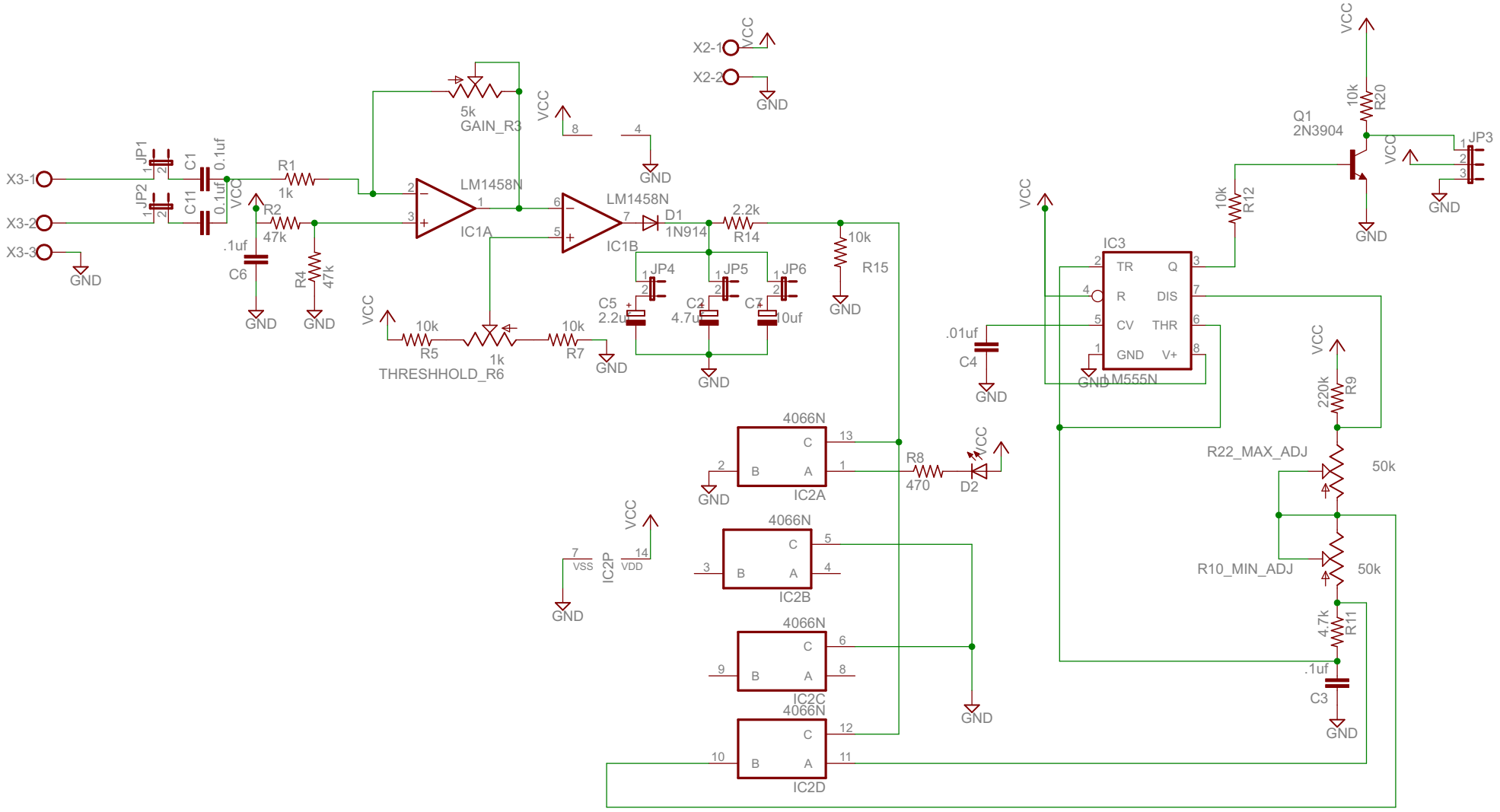
X3-1
X3-2
X3-3
GND
JP1
JP2
C1
C11
0.1uf
VCC
R1
1k
R2
47k
.1uf
C6
R4
47k
5k
GAIN_R3
LM1458N
IC1A
10k
R5
1k
THRESHHOLD_R6
10k
R7
LM1458N
IC1B
D1
1N914
2.2k
R14
10k
R15
JP4
JP5
JP6
C5
2.2uf
C2
4.7uf
C7
10uf
X2-1
X2-2
4066N
IC2A
IC2B
IC2C
IC2D
IC2P
VSS
VDD
R8
470
D2
IC3
TR
Q
R
DIS
CV
THR
GND
V+
LM555N
.01uf
C4
10k
R12
Q1
2N3904
10k
R20
JP3
220k
R9
R22_MAX_ADJ
50k
R10_MIN_ADJ
50k
4.7k
R11
.1uf
C3